Document No.	REV	DWG BY	CHK'D BY	APPV'D BY	Date
	0	Keith W			

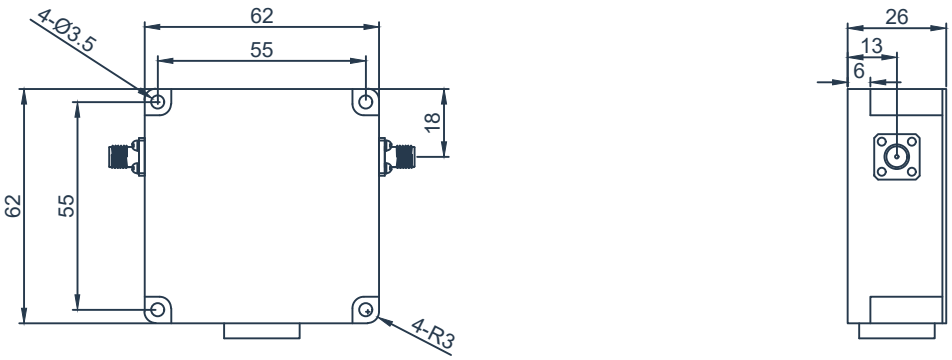

SPECIFICATIONS

Part's Number	HCITB03T06G-B
Frequency(GHz)	0.3-0.6
Direction	Counter Clockwise
Insertion Loss(dB)MAX	0.6
Isolation(dB)MIN	15.0
VSWR MAX	1.5
Phase equalization(±°)	-
PK/CW （Watt）	1000/100
Operating Temperature(°C)	-55~+85
Reverse Power(Watt)	15
Conector	SMA
Base plate plating	Thread Fastening
BW Max	40%

Description:Coaxial Isolator

Hzbeat Electronic Technology Co. Ltd

1:2

Unit:mm

A4