Document No.	REV	DWG BY	CHK'D BY	APPV'D BY	Date
	0	Keith W			

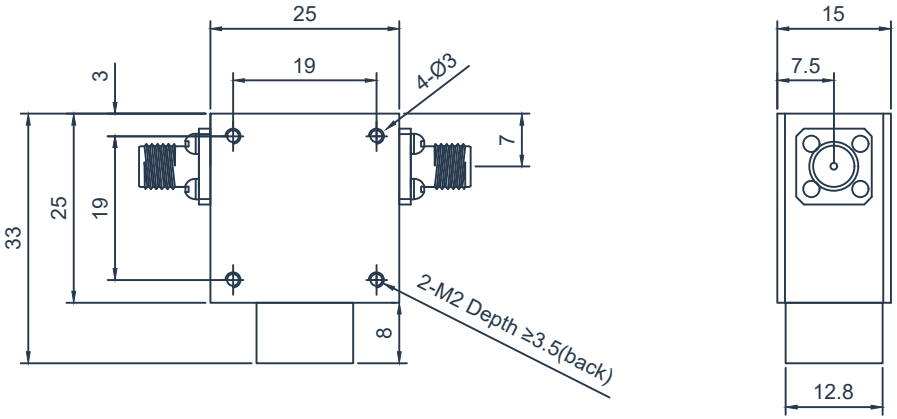

SPECIFICATIONS

Part's Number	HCITB30T60G-B
Frequency(GHz)	3.0-6.0
Direction	Counter Clockwise
Insertion Loss(dB)MAX	0.6
Isolation(dB)MIN	16.0
VSWR MAX	1.35
Phase equalization(±°)	-
PK/CW （Watt）	-/60
Operating Temperature(°C)	-40~+70
Reverse Power(Watt)	60
Conector	SMA
Base plate plating	Thread Fastening
BW Max	FULL

Description:Coaxial Isolator

Description:Coaxial Isolator

1:1

Unit:mm

A4