Document No.	REV	DWG BY	CHK'D BY	APPV'D BY	Date
	0	Keith W			

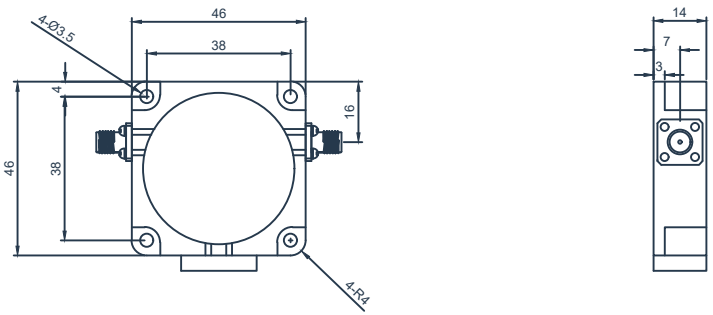

SPECIFICATIONS

Part's Number	HCITB04T10G
Frequency(GHz)	0.4-1.0
Direction	Counter Clockwise
Insertion Loss(dB)MAX	0.4
Isolation(dB)MIN	20.0
VSWR MAX	1.2
Phase equalization(±°)	-
PK/CW （Watt）	500/50
Operating Temperature(°C)	-55~+85
Reverse Power(Watt)	15
Conector	SMA
Base plate plating	Thread Fastening
BW Max	10%

Description:Coaxial Isolator

Hzbeat Electronic Technology Co. Ltd

Unit:mm

1:2

A4