Document No.	REV	DWG BY	CHK'D BY	APPV'D BY	Date
	0	Keith W			

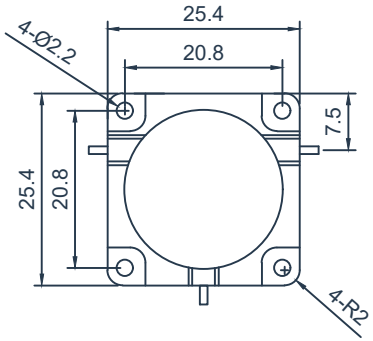

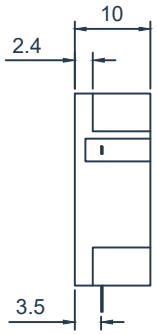

SPECIFICATIONS

Part's Number	HDCTC08T34G
Frequency(GHz)	0.8-3.4
Direction	Clockwise
Insertion Loss(dB)MAX	0.4
Isolation(dB)MIN	20.0
VSWR MAX	1.25
Phase equalization(±°)	-
PK/CW （Watt）	500/100
Operating Temperature(°C)	-55~+85
Reverse Power(Watt)	-
Conector	TAB
Base plate plating	Nickel plating
BW Max	20%

Description:Drop In Circulator

Hzbeat Electronic Technology Co. Ltd

1:1

Unit:mm

A4

Document No.	REV	DWG BY	CHK'D BY	APPV'D BY	Date
	0	Keith W			

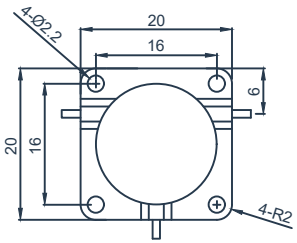

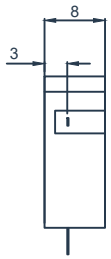

SPECIFICATIONS

Part's Number	HDCTC10T34G
Frequency(GHz)	1.0-3.4
Direction	Clockwise
Insertion Loss(dB)MAX	0.4
Isolation(dB)MIN	20.0
VSWR MAX	1.25
Phase equalization(±°)	-
PK/CW （Watt）	500/100
Operating Temperature(°C)	-55~+85
Reverse Power(Watt)	-
Conector	TAB
Base plate plating	Nickel plating
BW Max	15%

Description:Drop In Circulator

Hzbeat Electronic Technology Co. Ltd

1:1

Unit:mm

A4