| Document No. | REV | DWG BY | CHK'D BY | APPV'D BY | Date |
|---|---|---|---|---|---|
| | 0 | Keith W | | | |

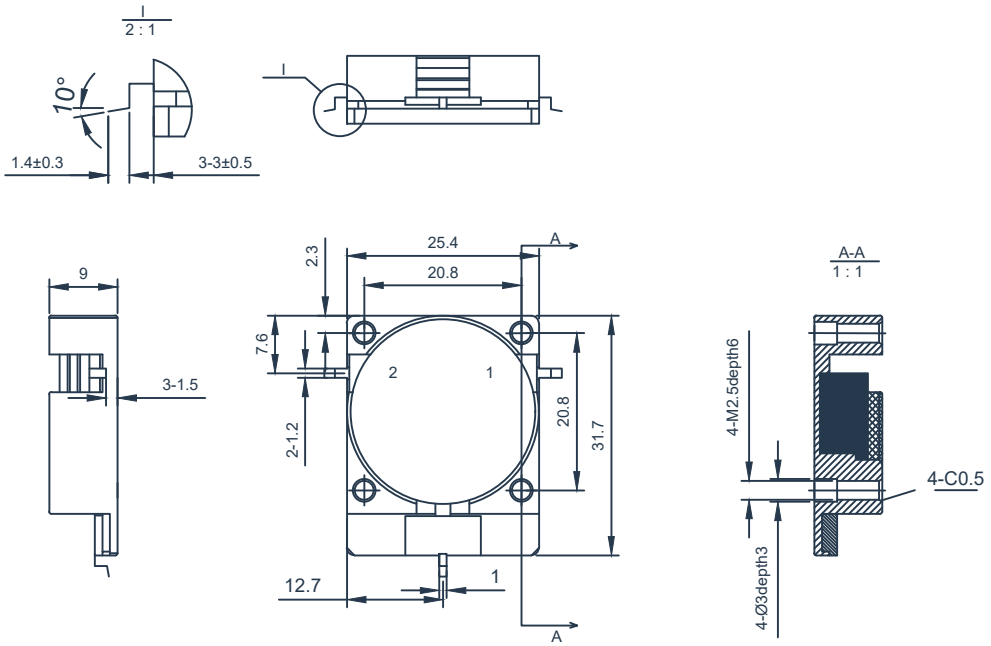


## SPECIFICATIONS

| | |
|---|---|
| Part's Number | HDIE2110T2170M |
| Frequency(GHz) | 2.11-2.17 |
| Direction | Clockwise |
| Insertion Loss(dB)MAX | 0.25(0.2) |
| Isolation(dB)MIN | 23.0(25.0) |
| VSWR MAX | 1.22(1.15/1.12) |
| Phase equalization(±°) | - |
| PK/CW （Watt） | 2500/250 |
| Operating Temperature(°C) | -40~+125 |
| Reverse Power(Watt) | - |
| Conector | SMT |
| Base plate plating | Nickel plating |
| BW Max | FULL |

# Description:SMD Isolator

Hzbeat Electronic Technology Co. Ltd

1:1

Unit:mm

A4