Document No.	REV	DWG BY	CHK'D BY	APPV'D BY	Date
	0				

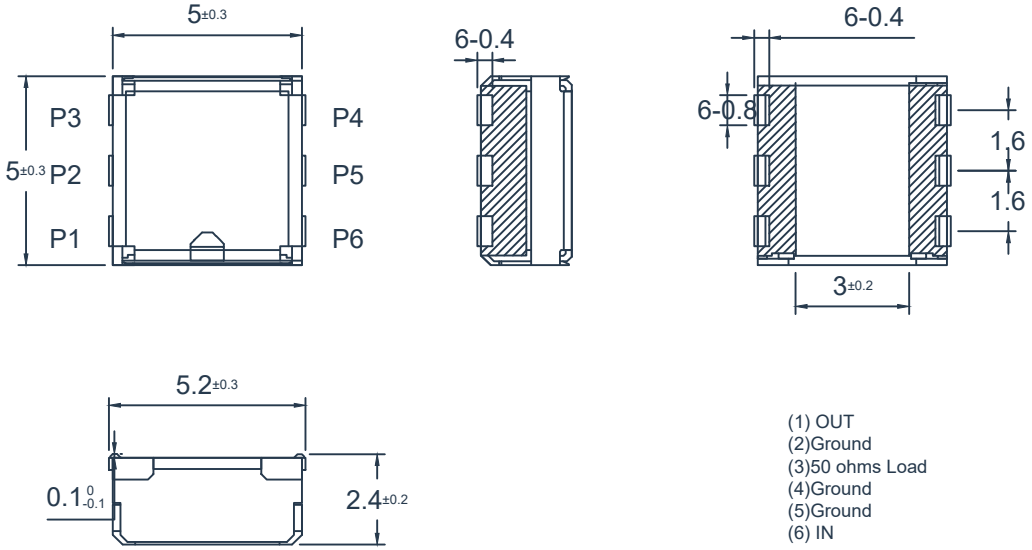

(1) OUT
(2)Ground
(3)50 ohms Load
(4)Ground
(5)Ground
(6) IN

Unless otherwise specified, the surface flatness is 3.2

SPECIFICATIONS

Part's Number	HLIU1427T1517M
Frequency(GHz)	1.427-1.517
Insertion Loss(dB)MAX	0.8(-40~+125℃)
Isolation(dB)MIN	13.0(-40~+125℃)
VSWR MAX	1.58(-40~+125℃)
PK/CW （Watt）	10/2
Reverse Power (Max)	-
Operating Temperature(°C)	-40~+125
Conector	SMD
BW Max	FULL

Description:SMD Isolator

Hzbeat Electronic Technology Co. Ltd

5:1

Unit:mm

A4