Document No.	REV	DWG BY	CHK'D BY	APPV'D BY	Date
	0	Keith W			

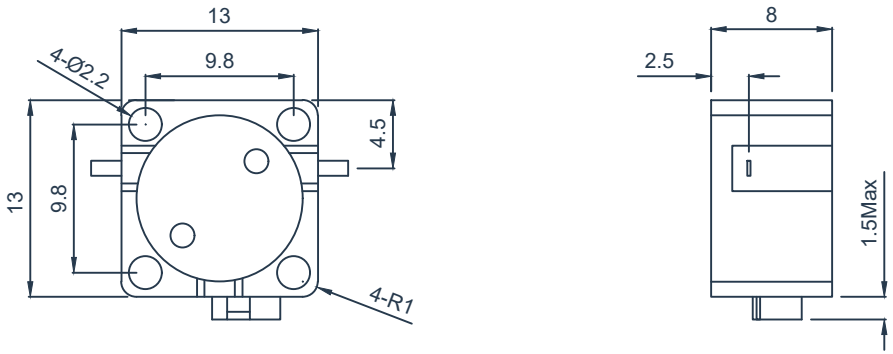

SPECIFICATIONS

Part's Number	HDITD18T35G
Frequency(GHz)	1.8-3.5
Direction	Counter Clockwise
Insertion Loss(dB)MAX	0.3
Isolation(dB)MIN	20.0
VSWR MAX	1.2
Phase equalization(±°)	-
PK/CW （Watt）	500/50
Operating Temperature(°C)	-55~+85
Reverse Power(Watt)	-
Conector	TAB
Base plate plating	Nickel plating
BW Max	5%

Description:Drop In Isolator

Hzbeat Electronic Technology Co. Ltd

Unit:mm

2:1

A4

Document No.	REV	DWG BY	CHK'D BY	APPV'D BY	Date
	0	Keith W			

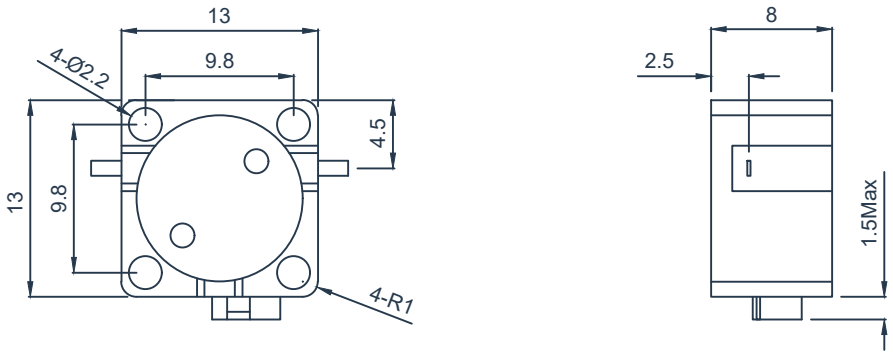

SPECIFICATIONS

Part's Number	HDITD18T35G
Frequency(GHz)	1.8-3.5
Direction	Counter Clockwise
Insertion Loss(dB)MAX	0.4
Isolation(dB)MIN	20.0
VSWR MAX	1.25
Phase equalization(±°)	-
PK/CW （Watt）	500/50
Operating Temperature(°C)	-55~+85
Reverse Power(Watt)	-
Conector	TAB
Base plate plating	Nickel plating
BW Max	10%

Description:Drop In Isolator

Hzbeat Electronic Technology Co. Ltd

Unit:mm

2:1

A4