Document No.	REV	DWG BY	CHK'D BY	APPV'D BY	Date
	0				

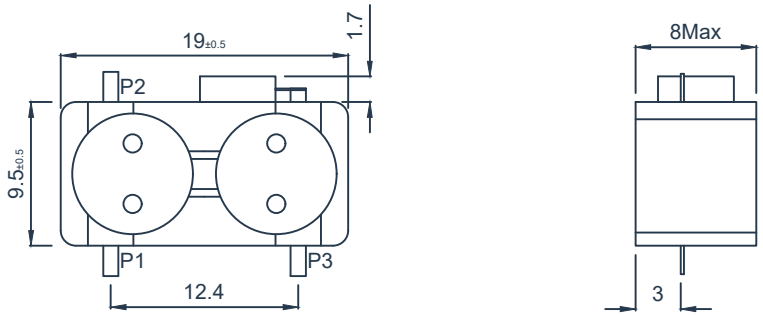

SPECIFICATIONS

Part's Number	HDDHA53T59G
Frequency(GHz)	5.3-5.9
Direction	P1-P2/P2-P3
Insertion Loss(dB)MAX	0.45(P1-P2)
	0.8(P2-P3)
Isolation(dB)MIN	19.0(P2-P1)
	38.0(P3-P2)
VSWR MAX	1.25
PK/CW（Watt）	100/20
Operating Temperature(°C)	-40~+70
Reverse Power(Watt)	20
Conector	TAB
BW Max	FULL

Description:Drop In Dual-Junction Circulator

Unless otherwise specified, the surface flatness is 3.2

	2:1
Unit:mm	A4