Document No.	REV	DWG BY	CHK'D BY	APPV'D BY	Date
HD220723-1	0	Keith W			07.23.2022

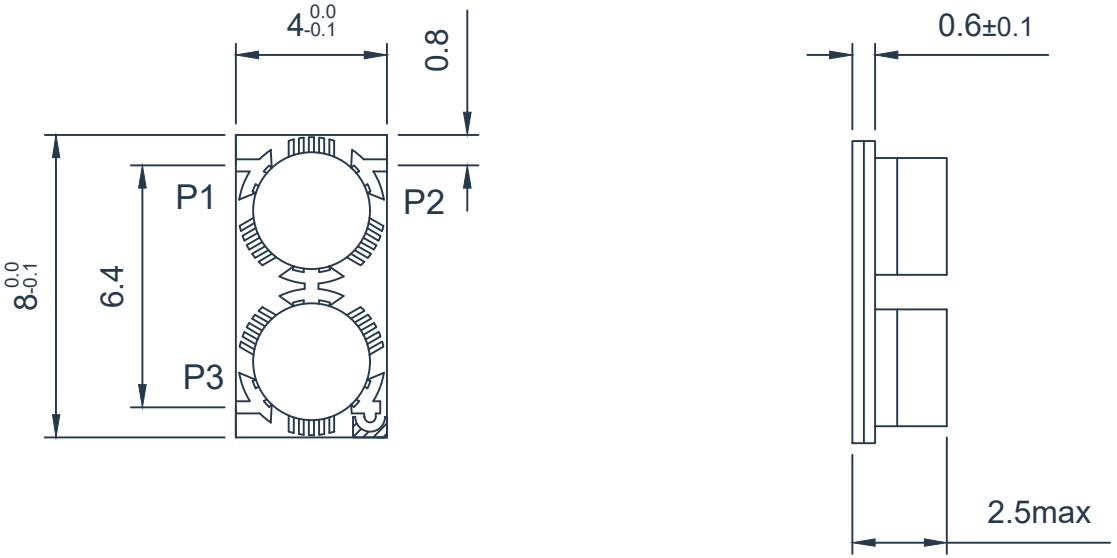

Unless otherwise specified, the surface flatness is 3.2

SPECIFICATIONS

Part's Number	HMDHB90T100G-M
Frequency(GHz)	9.0-10.0
Direction	P2-P1/P1-P3
Insertion Loss(dB)MAX	0.5(P1-P2)
	1.0(P2-P3)
Isolation(dB)MIN	18.0(P2-P1)
	30.0(P3-P2)
VSWR MAX	1.25
PK/CW （Watt）	10/5
Operating Temperature(°C)	-55~+85
Reverse Power(Watt)	1
Conector	Gold wire bonding/Lap welding
Base plate plating	Gold Plating/Plate with silver

Description: Microstrip Dual-Junction Circulator

Hzbeat Electronic Technology Co. Ltd

Unit:mm

5:1

A4