| Document No. | REV | DWG BY | CHK'D BY | APPV'D BY | Date |
|---|---|---|---|---|---|
| HD220527-4 | 0 | Keith W | | | |

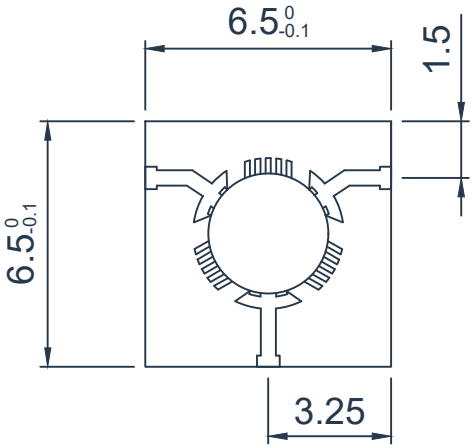


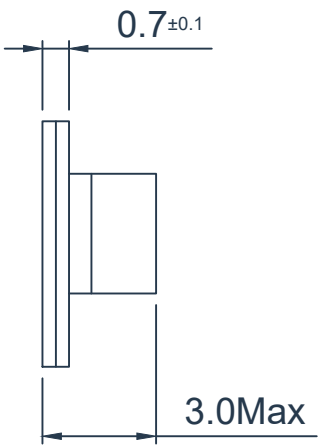


## SPECIFICATIONS

| | |
|---|---|
| Part's Number | HMCTB80T120G-B |
| Frequency(GHz) | 8.0-12.0 |
| Direction | Counter Clockwise |
| Insertion Loss(dB)MAX | 0.5 |
| Isolation(dB)MIN | 19 |
| VSWR MAX | 1.25 |
| Phase equalization(±°) | - |
| PK/CW (Watt) | 20/10 |
| Operating Temperature(°C) | -55~+85 |
| Reverse Power(Watt) | - |
| Conector | Gold wire bonding/Lap welding |
| Surface treatment | Gold Plating/Plate with silver |
| Additional Notes | |

# Description:Microstrip Circulator

Hzbeat Electronic Technology Co. Ltd

Unit:mm

5:1

A4