Document No.	REV	DWG BY	CHK'D BY	APPV'D BY	Date
HD220528-14	0	Keith W			

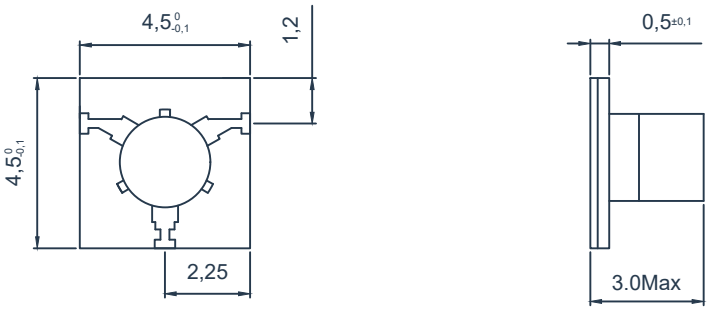

SPECIFICATIONS

Part's Number	HMCTB240T280G
Frequency(GHz)	24.0-28.0
Direction	Counter Clockwise
Insertion Loss(dB)MAX	0.5
Isolation(dB)MIN	20
VSWR MAX	1.25
Phase equalization(±°)	-
PK/CW （Watt）	20/10
Operating Temperature(°C)	-55~+85
Reverse Power(Watt)	-
Conector	Gold wire bonding/Lap welding
Surface treatment	Gold Plating/Plate with silver
Additional Notes	

Description:Microstrip Circulator

Hzbeat Electronic Technology Co. Ltd

Unit:mm

5:1

A4