Document No.	REV	DWG BY	CHK'D BY	APPV'D BY	Date
HD220528-12	0	Keith W			

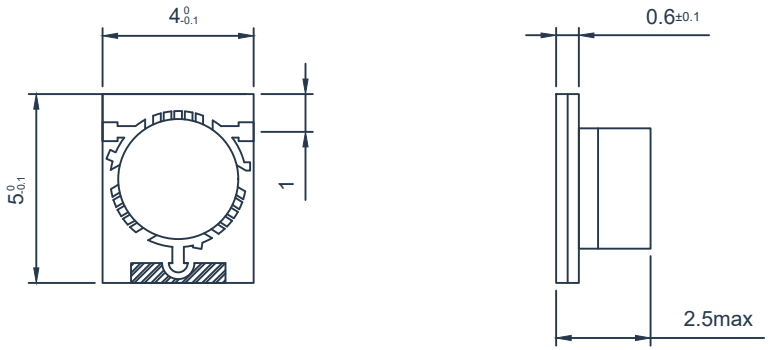

SPECIFICATIONS

Part's Number	HMITB80T120G-M
Frequency(GHz)	8.0~12.0
Direction	Counter Clockwise
Insertion Loss(dB)MAX	0.6
Isolation(dB)MIN	15
VSWR MAX	1.4
Phase equalization(±°)	-
PK/CW （Watt）	5/2
Operating Temperature(°C)	-55~+85
Reverse Power(Watt)	2
Conector	Surface Mount Technology
Surface treatment	-
Additional Notes	

Description:Microstrip Isolator

Hzbeat Electronic Technology Co. Ltd

Unit:mm

5:1

A4