Document No.	REV	DWG BY	CHK'D BY	APPV'D BY	Date
HD220723-1	0	Keith W			07.23.2022

HzBeat

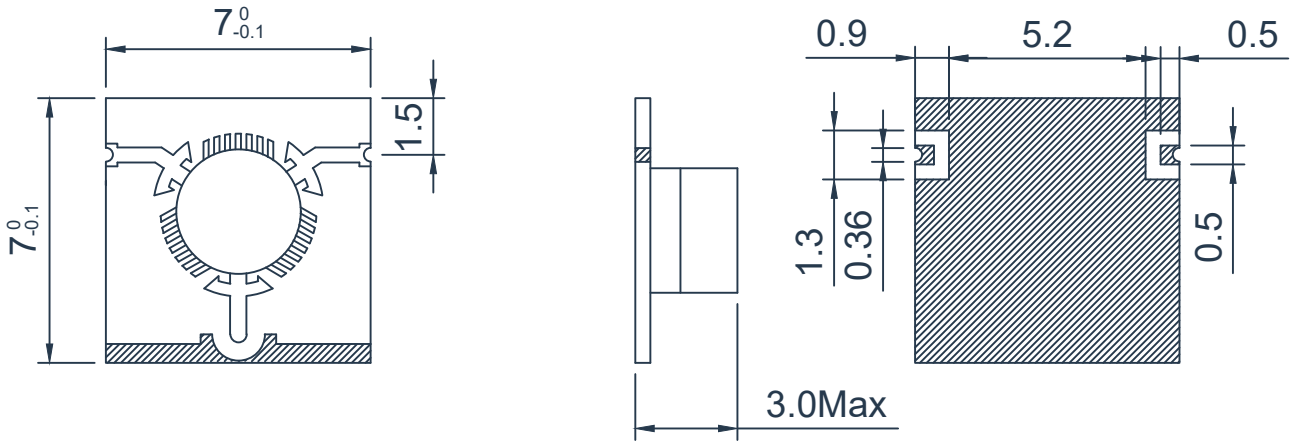

SPECIFICATIONS

Part's Number	HMITE80T120G
Frequency(GHz)	8.0~12.0
Direction	Clockwise
Insertion Loss(dB)MAX	0.6
Isolation(dB)MIN	18
VSWR MAX	1.3
Phase equalization(±°)	-
PK/CW (Watt)	20/10
Operating Temperature(°C)	-55~+85
Reverse Power(Watt)	2
Conector	Surface Mount Technology
Surface treatment	-
Additional Notes	

Description:SMT Microstrip Isolator

Unless otherwise specified, the surface flatness is 3.2

	5:1
Unit:mm	A4