Document No.	REV	DWG BY	CHK'D BY	APPV'D BY	Date
	0	Keith W			

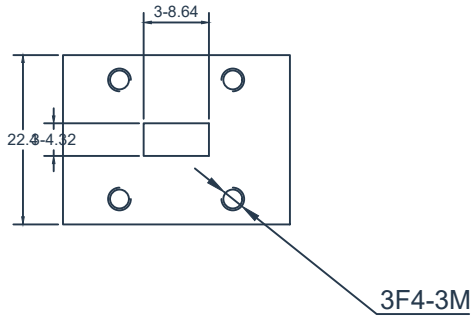

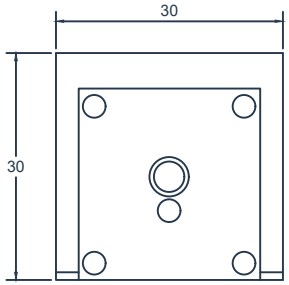

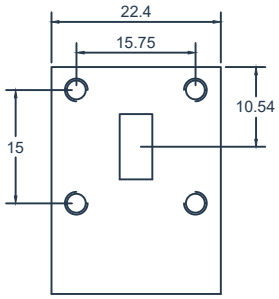

SPECIFICATIONS

Part's Number	HWCT220T330G
Frequency(GHz)	22.0-33.0
Direction	-
Insertion Loss(dB)MAX	0.3
Isolation(dB)MIN	20.0
VSWR MAX	1.25
Phase equalization(±°)	-
PK/CW （Watt）	-/200
Operating Temperature(°C)	-55~+85
Reverse Power(Watt)	-
Conector	WR-34
Base plate plating	Aluminum Oxidation treatment
BW Max	FULL

Description:Waveguide Circulator

Hzbeat Electronic Technology Co. Ltd

1:1

Unit:mm

A4